DS-2CV2041G2-IDW(W)
4 MP EXIR Fixed Bullet Wi-Fi Network Camera

- High quality imaging with 4 MP resolution
- Realizing Wi-Fi connection and easy installation
- Provides real-time security via built-in two-way audio
- Efficient H.265 compression technology
- EXIR 2.0, advanced infrared technology with long IR distance
- **Wi-Fi connection with Hik-Connect directly is possible**
- Water and dust resistant (IP66)
- Built-in memory card slot, support microSD/microSDHC/microSDXC card, up to 512 GB

▪ Specification

Camera	
Image Sensor	1/3" Progressive Scan CMOS
Min. Illumination	Color: 0.005 Lux @ (F1.6, AGC ON), B/W: 0 Lux with IR
Max. Resolution	2560 × 1440
Shutter Time	1/3 s to 1/100,000 s
Day & Night	IR cut filter
Angle Adjustment	Pan: 0° to 360°, tilt: 0° to 90°, rotate: 0° to 360°
Lens	
Lens Type	Fixed focal lens, 2.8 and 4 mm optional
Focal Length & FOV	2.8 mm, horizontal FOV 95°, vertical FOV 53°, diagonal FOV 111° 4 mm, horizontal FOV 79°, vertical FOV 40°, diagonal FOV 94°
Aperture	F1.6
Lens Mount	M12
Iris Type	Fixed
Depth of Field	2.8 mm: 1 m to ∞ 4 mm: 1.2 m to ∞
DORI	
DORI	2.8 mm, D: 63 m, O: 25 m, R: 12 m, I: 6 m 4 mm, D: 78 m, O: 31 m, R: 15 m, I: 7 m
Illuminator	
Supplement Light Type	IR
IR Wavelength	850 nm
Supplement Light Range	Up to 30 m
Smart Supplement Light	Yes
Video	
Main Stream	50 Hz: 20 fps (2560 × 1440), 25 fps (1920 × 1080, 1280 × 720) 60 Hz: 20 fps (2560 × 1440), 30 fps (1920 × 1080, 1280 × 720)
Sub-Stream	50 Hz: 25 fps (1280 x 720, 640 × 480, 640 × 360) 60 Hz: 30 fps (1280 x 720, 640 × 480, 640 × 360)
Video Compression	Main stream: H.265+/H.265/H.264+/H.264 Sub-stream: H.265/H.264/MJPEG
Video Bit Rate	32 Kbps to 8 Mbps
H.264 Type	Baseline Profile, Main Profile, High Profile
H.265 Type	Main Profile
Bit Rate Control	CBR, VBR
Audio	
Audio Compression	G.711ulaw/G.711alaw/G.722.1/G.726/MP2L2/PCM/AAC-LC
Audio Bit Rate	64 Kbps (G.711)/16 Kbps (G.722.1)/16 Kbps (G.726)/32 to 160 Kbps (MP2L2)/16 to 64 Kbps (AAC-LC)
Audio Sampling Rate	8 kHz/16 kHz
Environment Noise Filtering	Yes

Network	
Protocols	TCP/IP, ICMP, HTTP, HTTPS, DHCP, DNS, DDNS, RTP, RTSP, RTCP, PPPoE, NTP, UPnP, SMTP, SNMP, IGMP, QoS, IPv6, Bonjour
Simultaneous Live View	Up to 6 channels
API	Open Network Video Interface (Profile S, Profile G, Profile T), ISAPI, SDK
User/Host	Up to 32 users. 3 levels: administrator, operator and user
Security	Password protection, complicated password, HTTPS encryption, IP address filter, Security Audit Log, basic and digest authentication for HTTP/HTTPS
Network Storage	NAS (NFS, SMB/CIFS), Auto Network Replenishment (ANR), Together with high-end Hikvision memory card, memory card encryption and health detection are supported.
Client	Wired network: Hik-Connect, iVMS-4200 Wi-Fi: Hik-Connect, iVMS-4200 *Wi-Fi connection with Hik-Connect directly is possible.
Web Browser	Plug-in required live view: IE 10+ Plug-in free live view: Chrome 57.0+, Firefox 52.0+ Local service: Chrome 57.0+, Firefox 52.0+
Wi-Fi	
Transfer Rate	11n: up to 300 Mbps
Wi-Fi Protocol	802.11n: OFDM, 802.11b: DSSS, 802.11g: OFDM
Frequency Range	2.412 GHz to 2.472 GHz
Channel Bandwidth	20/40 MHz
Modulation	802.11n: BPSK, QPSK, 16QAM, and 64QAM, 802.11b: DBPSK and DQPSK, CCK, 802.11g: BPSK, QPSK, 16QAM, and 64QAM
Wireless Range	Up to 120 m (The performance varies based on actual environment)
Antenna	2 Antennas
Image	
Image Settings	saturation, brightness, contrast, sharpness, adjustable by client software or web browser
Day/Night Switch	Auto, Schedule, Day, Night
Wide Dynamic Range (WDR)	120 dB
SNR	≥ 52 dB
Image Enhancement	BLC, 3D DNR
Interface	
Built-in Microphone	Yes
Built-in Speaker	Yes
On-Board Storage	Built-in memory card slot, support microSD/microSDHC/microSDXC card, up to 512 GB
Reset Key	Yes
Ethernet Interface	1 RJ45 10 M/100 M self-adaptive Ethernet port
Event	
Basic Event	Motion detection, exception
Linkage	notify surveillance center, trigger recording, trigger capture, Upload to NAS/memory card

General	
Power	12 VDC ± 25%, 0.5 A, max. 6 W, Ø5.5 mm coaxial power plug, reverse polarity protection, A switching adapter is included in the package.
Storage Conditions	-30 °C to 60 °C (-22 °F to 140 °F). Humidity 95% or less (non-condensing)
Language	English, Ukrainian
General Function	Anti-banding, heartbeat, mirror, password protection, watermark, IP address filter
Startup and Operating Conditions	-30 °C to 60 °C (-22 °F to 140 °F). Humidity 95% or less (non-condensing)
Material	Base: metal, front cover: metal, back cover: plastic
Dimension	175.6 mm × 73 mm × 89.1 mm (6.9" × 2.9" × 3.5")
Package Dimension	260 mm × 125 mm × 125 mm (10.2" × 4.9" × 4.9")
Weight	Approx. 335 g (0.8 lb.)
With Package Weight	Approx. 689 g (1.5 lb.)
Approval	
EMC	FCC SDoC (47 CFR Part 15, Subpart B); CE-EMC (EN 55032: 2015, EN 61000-3-2: 2014, EN 61000-3-3: 2013, EN 50130-4: 2011 +A1: 2014);
RF	FCC ID (FCC Part 15.247(BT or 2.4G)); CE-RED (EN 301489-1 V2.1.1(BT or 2.4G); EN 301489-17 V3.1.1(BT or 2.4G); EN 300328 V2.1.1(BT or 2.4G); EN 62311:2008(BT or 2.4G)); MIC (JPN)
Safety	CB (IEC 60950-1:2005 + Am 1:2009 + Am 2:2013, IEC 62368-1:2014); CE-LVD (EN 60950-1:2005 + Am 1:2009 + Am 2:2013, IEC 62368-1:2014);
Environment	CE-RoHS: 2011/65/EU, WEEE: 2012/19/EU, Reach: Regulation (EC) No 1907/2006
Protection	IP66: IEC 60529-2013

▪ Typical Application

Hikvision products are classified into three levels according to their anti-corrosion performance. Refer to the following description to choose for your using environment.

This model has NO SPECIFIC PROTECTION.

Level	Description
Top-level protection	Hikvision products at this level are equipped for use in areas where professional anti-corrosion protection is a must. Typical application scenarios include coastlines, docks, chemical plants, and more.
Moderate protection	Hikvision products at this level are equipped for use in areas with moderate anti-corrosion demands. Typical application scenarios include coastal areas about 2 kilometers (1.24 miles) away from coastlines, as well as areas affected by acid rain.
No specific protection	Hikvision products at this level are equipped for use in areas where no specific anti-corrosion protection is needed.

▪ Available Model

DS-2CV2041G2-IDW (2.8/4 mm)

▪ Dimension

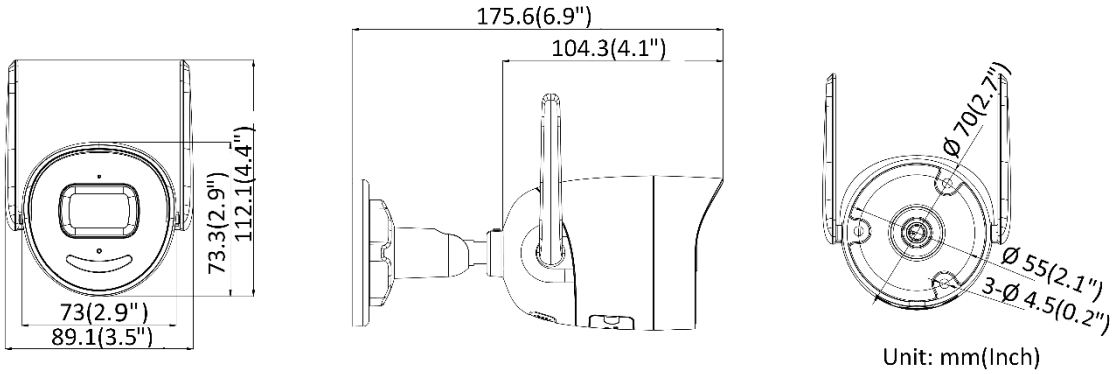

Unit: mm(Inch)

▪ Accessory

▪ Optional

DS-1280ZJ-XS Junction Box

Headquarters
No.555 Qianmo Road, Binjiang District,
Hangzhou 310051, China
T +86-571-8807-5998
www.hikvision.com

Follow us on social media to get the latest product and solution information.

Hikvision HikvisionHQ HikvisionHQ Hikvision_Global Hikvision Corporate Channel hikvisionhq

©Hikvision Digital Technology Co., Ltd. 2022 | Data subject to change without notice |